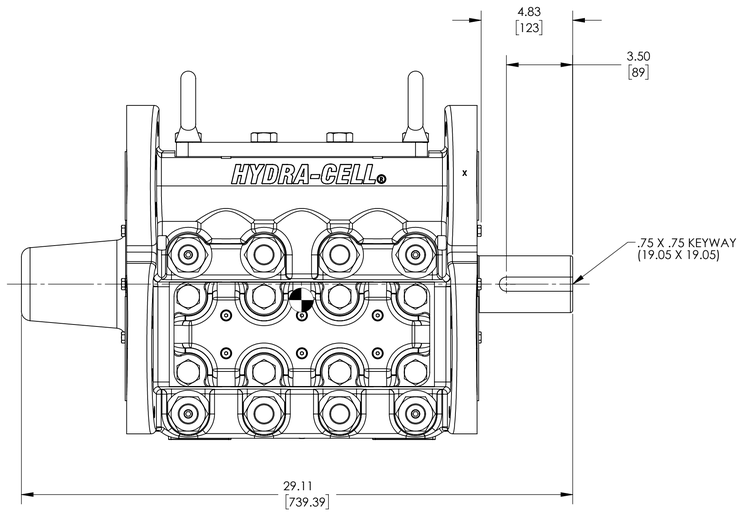

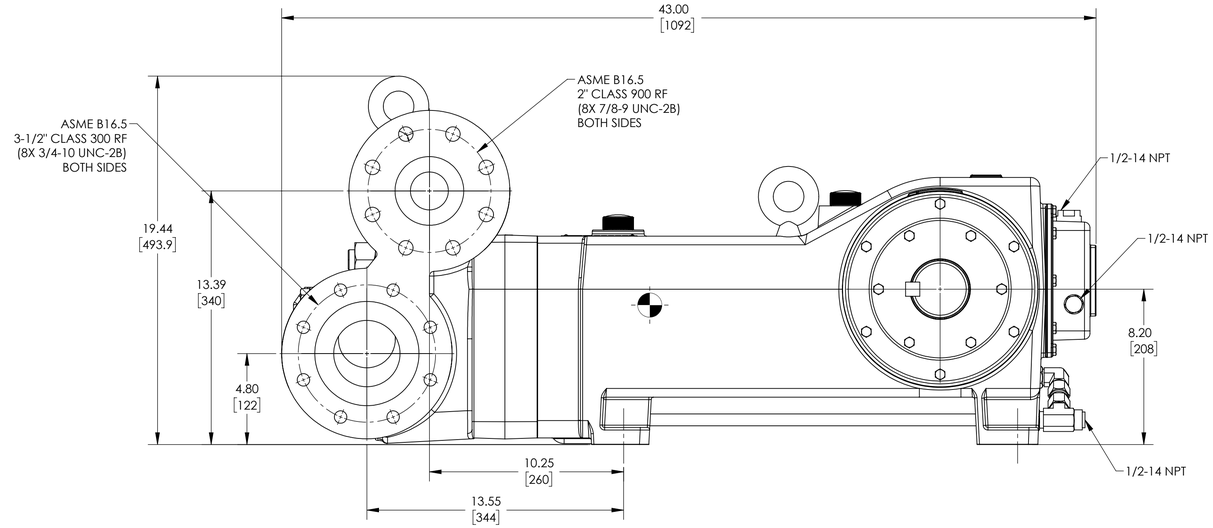

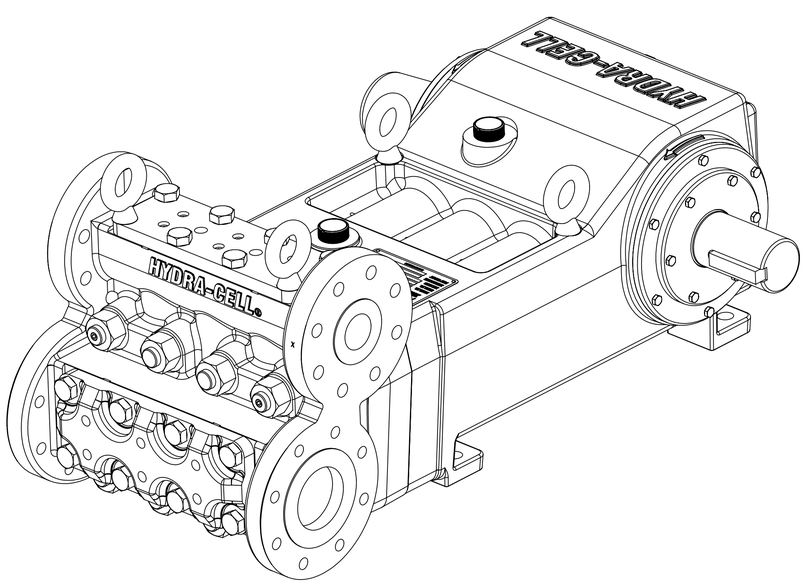

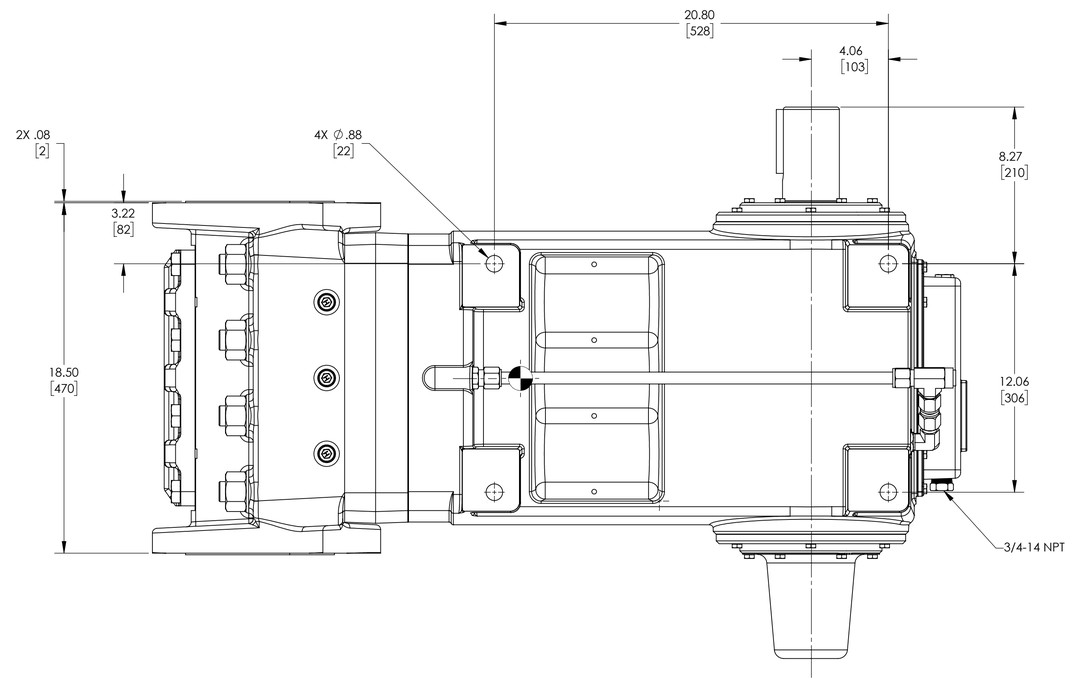

PROPRIETARY STATEMENT:
THIS DOCUMENT CONTAINS CONFIDENTIAL AND PROPRIETARY INFORMATION AND IS NOT TO BE REPRODUCED OR THE INFORMATION CONTAINED THEREIN DISCLOSED TO OTHERS WITHOUT CONSENT, IN WRITING, FROM WANNER ENGINEERING, INC.

MAT'L

UNLESS OTHERWISE SPECIFIED:

-DIMENSIONS ARE IN INCHES.
-INTERPRET DRAWING PER ASME Y14.5-2009.
-DIMENSIONS ARE AFTER PLATING,COATING AND HEAT TREATING, BUT BEFORE PAINTING.
-REMOVE ALL BURRS AND SHARP CORNERS.

TOLERANCES:
.X = ± .1
.XX = ± .02
.XXX = ± .005
ANGLES = ±1°

FINISH: 125√

DWN DGT DATE 09/18/12

THIRD ANGLE PROJECTION

DO NOT SCALE DRAWING

INCH

SCALE: 1:4 SHEET 1 OF 1

WANNER ENGINEERING, INC.
1204 CHESTNUT AVENUE MINNEAPOLIS, MN 55403

TITLE **T100-LR OUTLINE**

SIZE D

DWG NO T100-LR

REV C